PUSH-IN ADAPTOR MSA

+ For different materials
+ Internal seal
+ Resistant to 0.5 bar

Push-In Adaptor – for the internal connection of pipe systems with different dimensions and materials
The single Pipe Connector joints pipe systems with different dimensions and materials and can be used for flush-mounting and non-buried pipe connections.

The Push-In Adaptor is made from a durable EPDM rubber and has a noise reducing impact on downpipes.

CE 18 DIN EN 681

LRQA CERTIFIED ISO 9001

INSTALLATION

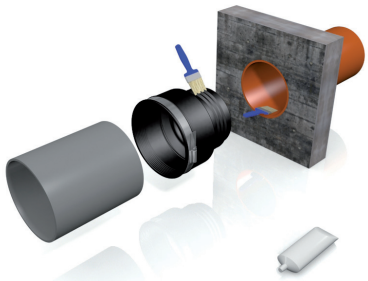

Position pipe ends.

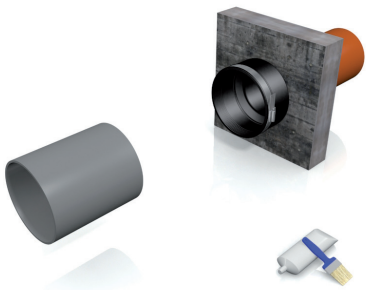

Insert Single Pipe Connector into larger pipe. Apply lubricant to plain ended pipe.

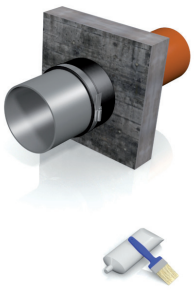

Insert smaller pipe into Single Pipe Connector.

PLUMBING

DESCRIPTION

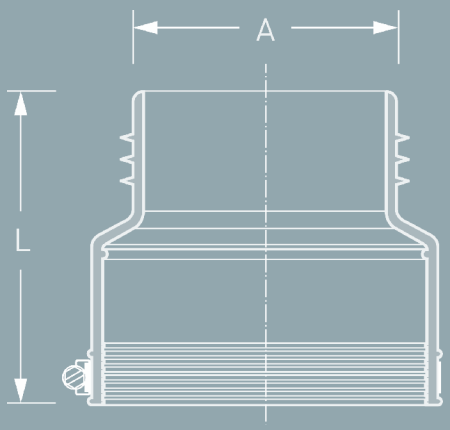

TECHNICAL SPECIFICATION

Push-In Adaptor for the internal connection of pipe systems with different dimensions and materials.

Manufacturer:	MÜCHER DICHTUNGEN®, D-50226 Frechen, T +49 2234 928 03-0, F -55
Pressure Tightness:	0.5 bar water / -0.3 bar vacuum
Sealing Material:	EPDM rubber according to DIN EN 681-1
Temperature Resistance:	-40°C to +120°C, +160°C
Standard/Approval:	DIN EN 681-1, CE16

PRODUCT RANGE

PUSH-IN ADAPTOR MSA

Article Number	Reference	A Size Range (mm)	B Size Range (mm)	L Length (mm)	resistant to (bar)	Nm	Weight (kg)
500117	Push-In Adaptor MSA 75	69 - 75	73 - 85	100	0,5	6	0,20
500116	Push-In Adaptor MSA 100	100 - 105	100 - 116	100	0,5	6	0,30
500118	Push-In Adaptor MSA 125	117 - 125	120 - 141	100	0,5	6	0,50
500138	Push-In Adaptor MSA 150	150 - 168	145 - 157	145	0,5	6	0,75